DC microgrids providing frequency regulation in electrical power system - imperfect communication issues

Hrvoje Bašić
Department of Energy and Power Systems
Faculty of Electrical Engineering and Computing, University of Zagreb
Zagreb, Croatia
hrvoje.basic@fer.hr

Tomislav Dragičević
Department of Energy Technology
The Faculty of Engineering and Science, Aalborg University
Aalborg, Denmark
tdr@et.aau.dk

Hrvoje Pandžić
Department of Energy and Power Systems
Faculty of Electrical Engineering and Computing, University of Zagreb
Zagreb, Croatia
hrvoje.pandzic@fer.hr

Frede Blaabjerg
Department of Energy Technology
The Faculty of Engineering and Science, Aalborg University
Aalborg, Denmark
fbl@et.aau.dk

***Abstract*—This paper presents a model of multiple DC microgrids with battery energy storage systems and demand response capability, taking part in primary frequency regulation of electrical power system. Although DC microgrids can contribute to stability and efficiency of frequency regulation, these complex systems may cause serious stability issues due to the imperfect communication. This work presents possible scenarios of unstable primary frequency regulation in a simplified model of electrical power system with DC microgrids, which are controlled through communication network.**

Keywords—DC microgrid, electrical power system, battery energy storage, demand response, frequency and active power regulation, communication

I. Nomenclature

D	Load damping constant of the system's response to load change
Δf	Frequency deviation of the AC power system
$\Delta f_{\text{dynamic}}$	Dynamic frequency deviation limit
Δf_{steady}	Quasi–steady state frequency deviation limit
ΔP_{PS}	Difference between consumption and power generation of all uncontrollable loads and generators in the power system and DC microgrids
f_{n}	Nominal frequency of the AC power system
G_{EPS}	Transfer function of the power system
K_{BESS}	Gain constant of battery energy storage system
K_{CG}	Gain constant of conventional generators for frequency regulation
K_{DR}	Gain constant of demand response
M	Inertia constant of system response to load change
P_{BESS}	Power of battery energy storage system
P_{CG}	Power of conventional generators for frequency regulation
P_{DR}	Power of demand response
P_{ESS}	Nominal power of the power system
$P_{\text{PFR-ESS}}$	Power reserves of primary frequency regulation for power system
T_{BESS}	Response time of battery energy storage system
T_{CG}	Response time of conventional generators for frequency regulation
T_{DR}	Response time of demand response

II. Introduction

As non-predictable distributed and renewable generation is becoming an integral part of power systems, there is a need for significant changes in operation of frequency and active power control [1]. It is necessary to provide higher frequency regulation reserves to support the capability of the power system to generate power equal to the consumption continuously [2]. Battery energy storage system, as the most promising distributed energy storage technology today, is proven to be a solid solution to the problem [3]. However, the cost of batteries is still not competitive, as elaborated in [4]. Therefore, DC microgrids that combine battery energy storage system with demand response have higher flexibility to participate in frequency regulation. Providing frequency regulation service to the power system can be organized through complex aggregator system [5]. Since there can be many microgrids in the system, it is important to coordinate their operation. Therefore, a robust and reliable communication infrastructure that allows exchange of information and control commands is required.

The proposed system comprises such communication network at several stages with different types of communication technologies and with different level of quality [6]. In reality, all of these technologies exhibit imperfect performance, which is notably characterized by communication delays, also commonly referred to as latencies. As safety and reliability of the power system and DC microgrids is the most important criterion in their operation, it is highly important to address possible problems in operation of the system in a realistic setting.

Since power systems are robust, communication issues are usually neglected in simulations and calculations. The focus of this work is to show that in modern power systems based on communication systems, there are possible scenarios where a small communication delay can result in a serious threat to the stability of the power system. We demonstrate that even small time delays, which usually occur in real control of power systems, can cause unsynchronized operation, which reduces the stability of the power system.

This work is organized as follows. Section III provides a literature review on existing research on imperfect communication issues in power systems. Technical characteristics of providing frequency regulation service in power system are described in section IV. Components of a simplified model of the power system and frequency stability analysis of the proposed system are presented in section V. Finally, analysis of the impact of imperfect communication to the stability of the power system and conclusions are given in sections VI and VII.

III. Literature review

Imperfect communication issue is recognized in industry as well as in research community as a serious source of potential problems in control systems, resulting in several relevant on the subject.

In [7], authors present a model of an isolated microgrid with primary and secondary frequency regulation. Primary regulation is based on the droop control method, and secondary regulation is modeled as a frequency restoration function with integrated constant time delay in communication data link for activation of secondary regulation. Simulations and experimental results are presented through different cases, one with usage of a delay differential – equations in a small signal model, two cases based on a numerical solutions of the nonlinear system provided by circuit simulator, and the experimental results based on laboratory prototype. Results show that integration of time delay (20 – 200 ms) into secondary regulation communication data link does not cause instability in frequency regulation.

In [8], a comparison of usage of a conventional proportional integral–based control, control with model predictive controller, and with smith predictor–based controller in secondary control of an islanded microgrid with communication delays integrated is presented. The comparison is based on calculation of maximum achievable delay with stable eigenvalues, where model predictive controller has given the best results.

Authors of [9] present a method for calculation the system stability delay margin based on critical eigenvalues and the corresponding oscillation of frequency. A single–machine–infinite–bus representation of the power system is transferred into polynomial equation with Rekasius substitution, and the Routh stability criterion is used to determine the system delay margin with mechanical power, different generation output and exciter gain. It is shown that an increase of the generation output and the exciter gain decreases the system stability delay margin.

Delay of the time between the measurements and utilization of the sent information is compensated with usage of model predictive control algorithm presented in [10]. Although the paper does not describe application of the proposed method to frequency regulation of power systems, it is shown that it can be applicable to any model predictive control applications with good results.

IV. Frequency regulation services in electrical power system

Stability of the power system is the most relevant indicator for reliable operation of the power system. Based on different physical characteristics, the stability of power system can be classified as rotor angle stability, frequency stability and voltage stability [11]. This work is focused on frequency stability, so the stability of power system is considered as the ability of a power system to keep generation and consumption in balance in every moment. Since the difference between generation and consumption directly affects the frequency deviation from its predicted nominal value (50 Hz or 60 Hz, depending on the power system), regulation of the power system frequency is organized in three basic levels [12]. Technical characteristics of power system and frequency regulation are defined for the European ENTSO-E system based on [2].

Primary regulation activates automatically in most of synchronous generators, usually in period from several seconds to 30 seconds. Active power generation depends on the change of the system frequency. The range of primary regulation is between 20 mHz and 200 mHz, where 200 mHz is considered as a quasi–steady state frequency limit. Quasi - steady state is supposed to be reached within 30 seconds after disturbance. Dynamic frequency deviation limit is, according to [2], set to 800 mHz. The purpose of primary regulation is to stabilize frequency to quasi–steady state after an outage of a generator or a load. It is important to notice that load sensitive to frequency change also contributes to frequency regulation. The isolated system must ensure sufficient frequency reserve to substitute the outage of the largest generator in the system. Interconnected power systems are more stable and robust, so the need for frequency reserves is smaller and is distributed among subsystems based on their size.

Secondary regulation is activated automatically in period from several seconds to 15 minutes. Besides regulation of frequency, secondary regulation participates in regulation of international power exchange. Recommended frequency regulation reserves can be calculated from (1), where R is the recommended frequency regulation reserve in MW, $L_{\max}$ is the

maximum anticipated load in MW for the subsystem in an interconnected power system, and a and b are parameters established empirically with the values 10 MW and 150 MW, respectively.

$$R = \sqrt{a \cdot L_{\max} + b^2} - b \tag{1}$$

Tertiary regulation is activated by the power system operator. It involves restoration of primary and secondary frequency reserves, returning the frequency to its nominal value when the disturbances are larger than the secondary regulation capacity.

The timing of the various ranges of activation and operation of primary, secondary and tertiary control [2] is shown in Fig. 1.

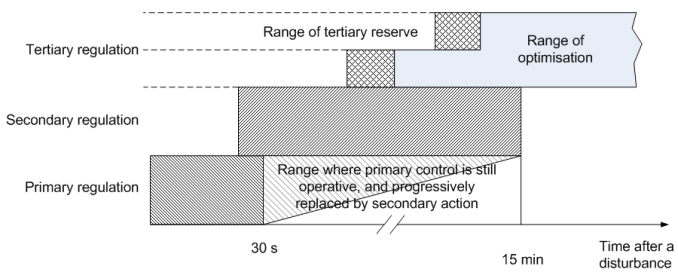

Fig. 1. The timing of the various ranges of action of primary, secondary and tertiary control

Response of the power system to a power imbalance consists of other dynamics as well, e.g. rotor swings in generators that contribute to frequency regulation in the first few seconds, and frequency drop that lasts from few to several seconds.

In this work, only primary frequency regulation is modeled and simulated, within period of 30 seconds. Secondary and tertiary frequency regulation actuation is not modeled.

V. MODEL DESCRIPTION

Since power systems are connected by high-capacity power lines into highly stable and robust systems called synchronous areas [2], it would be difficult to show the impact of imperfect communication to the stability of the system. Thus, the presented model is observed as an islanded power system, which depends only on its capability of regulation and its own regulation reserves. As shown in Table I, nominal capacity of the observed system is 4000 MW, frequency regulation reserves are +/- 100 MW in conventional generators, +/- 30 MW in battery energy storage system and maximum +/- 20 MW in demand response. Dynamic frequency deviation limit and quasi–steady state frequency limit are set to 800 mHZ and 180 mHz, respectively.

The power system is modeled as a system for frequency regulation connected to the perturbation of load / generation which represents the rest of the power system.

The power system is defined with inertia constant and with load – damping constant. Components of the frequency regulation system model can be separated in two parts. The first part represents all conventional generators that participate in frequency regulation, and the second consists of multiple DC microgrids aggregated with centralized control. In DC microgrids, only battery energy storage systems and load with ability of demand response are modeled because they will contribute to frequency regulation. Other components of DC microgrids are considered as a part of the power system.

All modeled components are based on small signal stability, represented as first–order lag transfer functions. System response to change of load is presented in equation (2), according to [13]. Transfer function of conventional generators is presented in (3) and transfer function of battery energy storage in (4), according to [14].

$$\mathrm{G}_{\mathrm{EPS}} = \frac{\Delta f}{\Delta P_{\text{load-generation}}} = \frac{1}{D + sM} \tag{2}$$

$$G_{\mathrm{CG}} = \frac{K_{\mathrm{CG}}}{1 + sT_{\mathrm{CG}}} \tag{3}$$

$$G_{\mathrm{BESS}} = \frac{K_{\mathrm{BESS}}}{1 + sT_{\mathrm{BESS}}} \tag{4}$$

Demand response is usually presented as a model of a controllable load that works in cycles within the limits of its purpose. Several types of consumer devices have the ability to adjust their demand within the limits of their purpose. The most common are heat pumps, air conditioning systems, heating systems, refrigerators, water heaters and electric vehicles. Cycles of turning thermostatically controlled loads on and off are shown in Fig. 2.

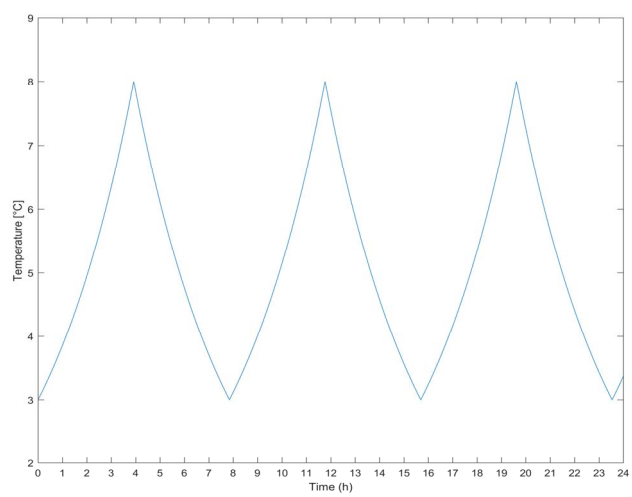

Fig. 2. Cycles of turning the load on and off

In this study a simpler model of demand response is used because period of only 30 seconds is observed in simulations, so control and behavior of load can be neglected. Demand

response is modeled as controllable load that can be turned on or off, depending on its availability. Transfer function of activation of demand response is presented in (5).

$$G_{DR} = \frac{K_{DR}}{1 + sT_{DR}} \tag{5}$$

The idea of the power system is presented, in Fig 3, as realistic nonlinear system with integrated limitations on the system components and control functions based on imperfect communication system. Communication network is presented in three levels, with different levels of importance to the system stability and, consequently, with different levels of quality. Demand response and battery energy storage system from DC microgrids send information of their availability to data concentrator. Congestion is set in wide area network, where all the data from aggregated DC microgrids transfer, so all relevant information from DC microgrids will transfer with a delay to connection router, responsible for control of conventional generators.

Two case scenarios are modeled. In both case scenarios, the outage of the largest generator in the power system is simulated in 10th second. Power of the largest generator is the same as the reserves for primary regulation from conventional generators. Battery energy storage system and demand response will become unavailable for activation in 10,05th and 15th second. Congestion delay will in the first case scenario be 200 ms, and in 1 s in second case scenario.

Parameters of all components and limitations of the system in real and per unit values are given in Table I.

TABLE I. PARAMETERS OF THE COMPONENTS OF THE SYSTEM

Parameter	*Real values*	*p.u. values*
P_{EPS}	4000 MW	1
$P_{PFR\text{-}ESS}$	+/- 100 MW	+/- 0,025
f_n	50 Hz	1
ΔP_{PS}	100 MW	0,025
$\Delta f_{dynamic}$	800 mHz	0,016
Δf_{steady}	180 mHz	0,0036
D		1,5
M		0,2
P_{CG}	+/- 100 MW	0,025
K_{CG}		20
T_{CG}	1,5 s	
P_{BESS}	+/- 30 MW	+/- 0,0075
K_{BESS}		30
P_{DR}	20	+/- 0,005
T_{BESS}	0,5 s	
K_{DR}		5
T_{DR}	1,0 s	

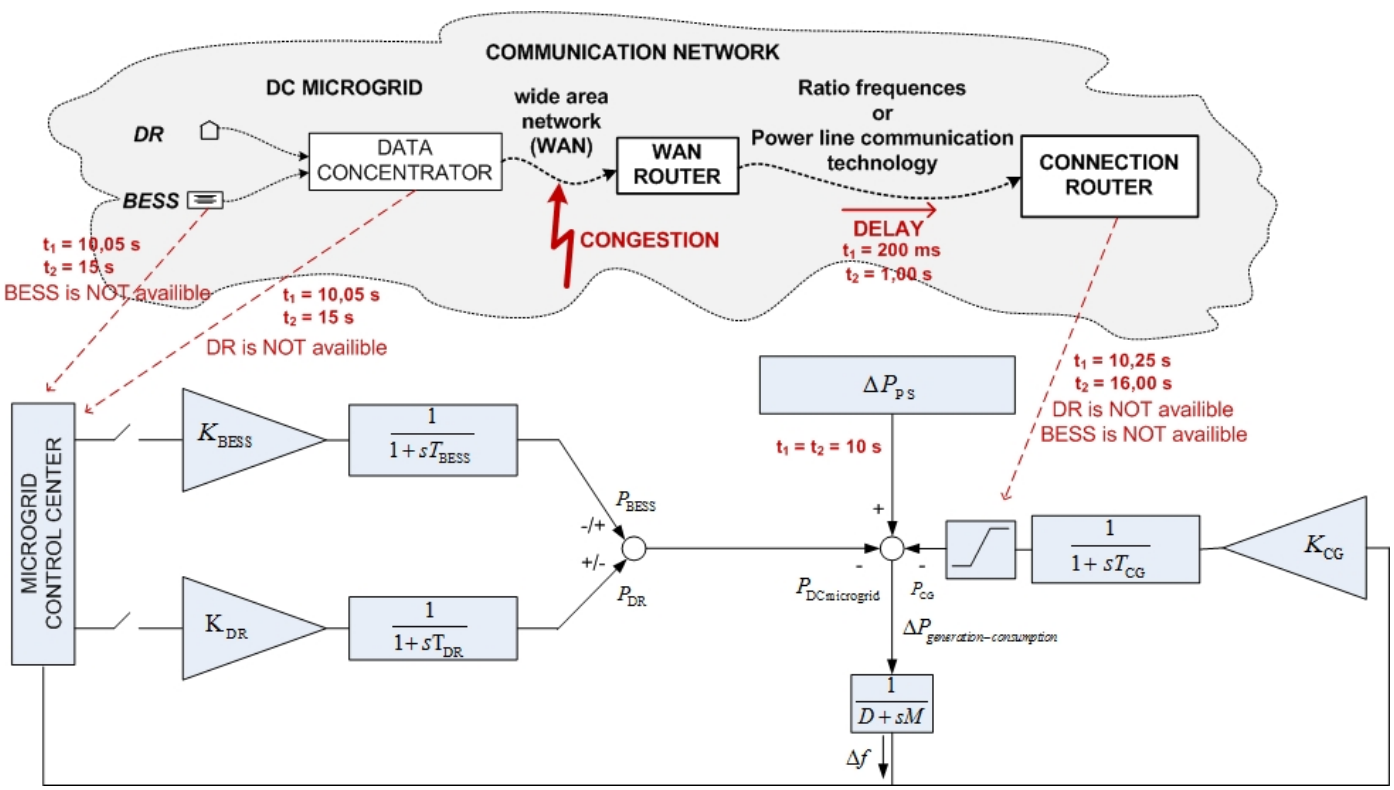

Fig. 3. Components of the electrical power system, DC microgrids and communication network model

The model is developed in the Matlab Simulink environment [15], as shown in Fig. 4. Transfer functions of units are modeled with Transfer Fcn. and Gain blocks, maximum power of generation units are limited with Saturation blocks. Modeling case scenarios is organized with two Step blocks. Step block ΔP_{PS} represents the increase in difference between consumption and generation after outage of the largest generator in the system, and Step block Signal: 'Turn BESS and DR off' represents the moment when battery energy storage system and demand response in DC microgrids become unavailable for activation. Delay in communication network in this model is presented only in terms of delay of control signals for activation of regular mode of operation of conventional generators after activation of battery energy storage system and demand response becomes unavailable. Switch blocks are used for changing the operation conditions of units, according to plan of the simulation. The additional switch block with additional transfer function is integrated in every switching mode component to remove the mistake that would be caused by integrating power of units in transfer functions before saturation of power. In this way, only one change of state of components is possible, which is sufficient for these simulations. Results of frequency deviation of the power system can be observed in Scope block Δf.

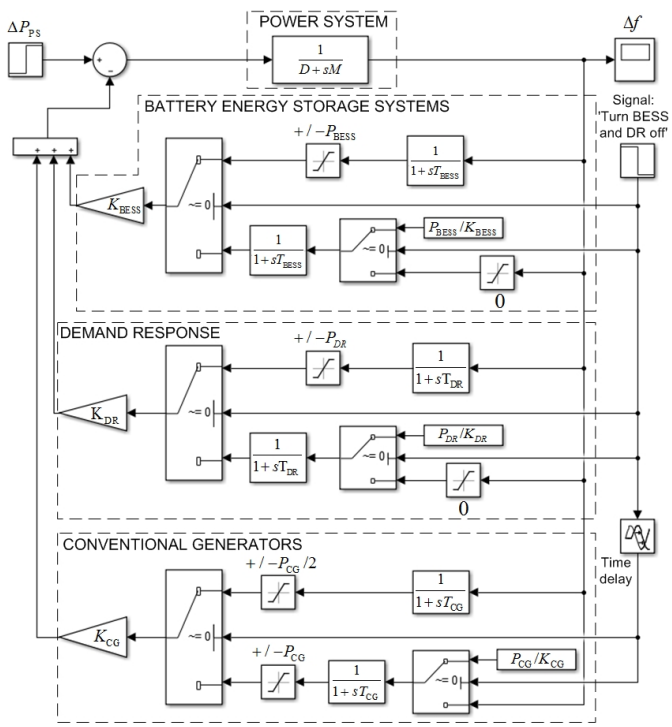

Fig. 4. Model of the presented system in modeled in Matlab

Stability of this complex system is not proven analytically in this work, but the worst-case scenario for primary frequency regulation, presented as an outage of the largest generator in the system, is observed in simulations and analyzed in the following section.

VI. Simulation of System Behavior and Analysis of Simulation Results

Control of the modeled power system is based on reducing the usage of conventional generators in providing frequency regulation services by using battery energy storage systems and demand response from aggregated DC microgrids. Control of the components of the proposed system relies on synchronous data transition, while activation of conventional generation depends on availability of DC microgrid components. The idea is to reduce usage of conventional generators when battery energy storage and / or demand response are available.

In the first case scenario, two case studies are shown with the same initial conditions and disruption shaped as a step–change in loss of generation in the 10th second of the simulation (see Fig. 5), after an outage of the largest generator in the system.

In case 1, regular operation of the system is shown. In 10,05th second of the simulation, state of charge of battery energy storage system reaches capacity discharge limit, and DR becomes unavailable for activation. As conventional generators receive information in time, they switch to regular mode of operation accordingly and the system remains stable, within the regulated limits – both dynamic frequency deviation limit and quasi–steady state frequency limits are not violated.

In case 2, congestion is implemented in communication network, which causes a delay of only 200 ms, which is usual in real life. During those 200 ms, conventional generators and DC microgrid components receive different information, so conventional generators continue operating in the reduced mode when DC microgrids should have taken over a part of loss of generation. In this case, it is shown that delay of this important information has caused the dynamic frequency deviation higher than allowed. Quasi–steady state deviation stays within the limits in this case.

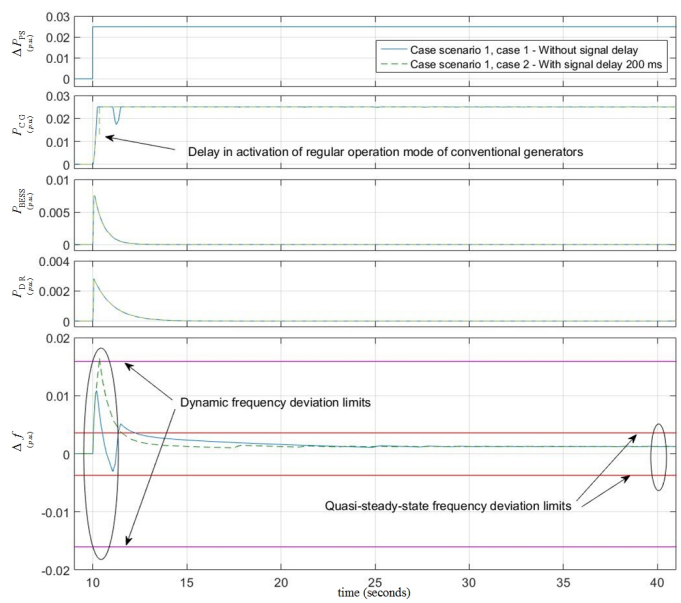

Fig. 5. Simulation results for both cases of case scenario 1

The second scenario, whose results are shown in Fig. 6, describes similar conditions as in the first, but with two differences. First, state of charge of battery energy storage system reaches capacity discharge limit and demand response becomes unavailable for activation in the 15th second of the simulation. Second, time delay of sending information is 1 second, which can be considered as loss of data in the real world. In case 1 the system remains stable. As no protective devices are integrated in the system components, the system becomes unstable and both dynamic frequency deviation limit and quasi – steady state frequency limit are violated in case 2. It is shown that conventional generators remain operating in reduced mode for 1 second after the disconnection of battery energy storage system and demand response, as a result of unsynchronized control.

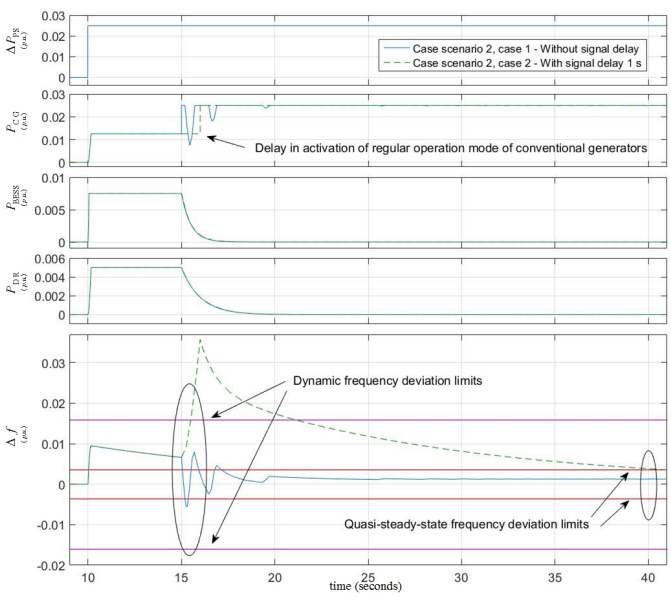

Fig. 6. Simulation results for both cases of case scenario 2

VII. Conclusion

Modern electrical power systems confront several challenges to ensure safety and stability in conditions of increased non-dispatchable generation, increased demand and the resulting complex management of the entire system through communication with different types of smart grids, microgrids and other distributed flexible elements.

In this work, the importance of properly addressing the communication issues within a complex system is elaborated through simulation of possible scenarios of latency of the control signals. Disturbance is presented as an intolerable frequency deviation as a result of non-synchronism in control caused by a delay in transporting and receiving crucial information of conditions in DC microgrids.

Acknowledgment

This work has been supported in part by Croatian Science Foundation and Croatian Transmission Operator System (HOPS) under the project SIREN – Smart Integration of RENewables (I-2583-2015).

References

[1] H. Bevrani, A. Ghosh, and G. Ledwich, “Renewable energy sources and frequency regulation: survey and new perspectives,” IET Renew. Power Gener., vol. 4, no. 5, pp. 438–457, Sep. 2010.

[2] Supporting Document for the Network Code on Operational Security, European Network of Transmission, System Operations report, Continental Europe Operation Handbook, UCTE OH – Policy 1: Load-Frequency Control - Final Version (approved by SC on 19 March 2009), available at www.entsoe.eu

[3] M. Benini, S. Canevese, D. Cirio, A. Gatti, “Battery energy storage systems for the provision of primary and secondary frequency regulation in Italy,” 2016 IEEE 16th International Conference on Environment and Electrical Engineering (EEEIC), 7-10 June 2016

[4] H Pandžić, I Kuzle, “Energy Storage Operation in the Day-Ahead Electricity Market, ” 2015 12th International Conference on the European Energy Market (EEM)

[5] C. Yuen, A. Oudalov, and A. Timbus, “The Provision of Frequency Control Reserves From Multiple Microgrids,” IEEE Trans. Ind. Electron., vol. 58, no. 1, pp. 173–183, Jan. 2011

[6] K. C. Budka, J. G. Deshpande, and M. Thottan, Communication Networks for Smart Grids, London, U. K.: Springer - Verlag, 2014. [Online]. Available: http://dx.doi.org/10.1007/978-1-4471-6302-2.

[7] E. A. A. Coelho, D. Wu, J. M. Guerrero; J. C. Vasquez, T. Dragičević, Č. Stefanović, P. Popovski, “Small-signal analysis of the microgrid secondary control considering a communication delay,” IEEE Transactions on Industrial Electronics, Year: 2016, Volume: 63, Issue: 10, Pages: 6257 - 6269, DOI: 10.1109/TIE.2016.2581155

[8] C. Ahumada, R. Cardenas, D. Saez, J. Guerrero, “Secondary control strategies for frequency restoration in islanded microgrids with consideration of communication delays,” IEEE Trans. Smart Grid, vol. 7, no. 3, pp. 1430-1441, Aug. 2015.

[9] H. J. Jia, X. D. Cao, X. D. Yu, P. Zhang, “A simple approach to determine power system delay margin,” Proc. 2007 IEEE Power Engineering Soc. General Meeting, pp. 1-7, 2007-Jun.-24–28.

[10] P. Cortes, J. Rodriguez, C. Silva, A. Flores, “Delay compensation in model predictive current control of a three-phase inverter,” IEEE Trans. Ind. Electron., vol. 59, no. 2, pp. 1323-1325, Feb. 2012.

[11] P. Kundur, J. Paserba, V. Ajjarapu, G. Andersson, A. Bose, C. Canizares, N. Hatziargyriou, D. Hill, A. Stankovic, C. Taylor, T. Van Cutsem, and V. Vittal, “Definition and classification of power system stability ieee/cigre joint task force on stability terms and definitions,” IEEE Trans. on Power Systems, vol. 19, no. 3, pp. 1387-1401, 2004.

[12] Jan Machowski, Janusz W. Bialek, James R. Bumby, “Power System Dynamics: Stability and Control,” John Wiley & Sons, Ltd, second edition 2008, ISBN 978-0-470-72558-0

[13] T. Senjyu, T. Nakaji, K. Uezato, T. Funabashi, “A hybrid power system using alternative energy facilities in isolated island,” IEEE Trans. Energy Convers., vol. 20, no. 2, pp. 406 – 414, Jun. 2005.

[14] D. J Lee and L. Wang, “Small - Signal Stability Analysis of an Autonomous Hybrid Renewable Energy Power Generation / Energy Storage System Part I: Time - Domain Simulations”, IEEE Trans. on Energy Conversion, Vol, 23, NO. 1, March 2008.

[15] https://se.mathworks.com/

[16] P. Kundur, Power System Stability and Control, 1994, McGraw-Hill.